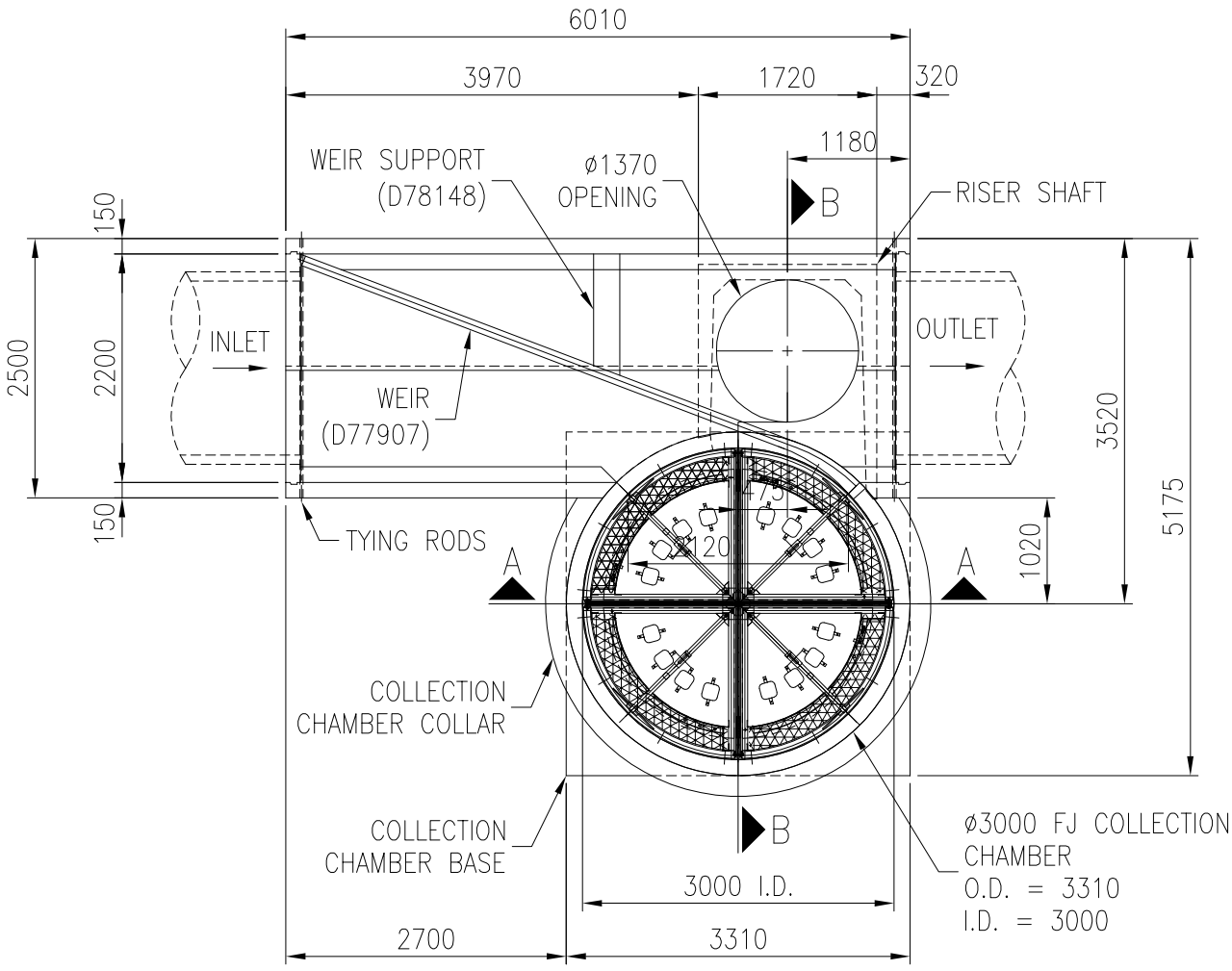

PLAN

(SURROUND, COVER, LID NOT SHOWN)

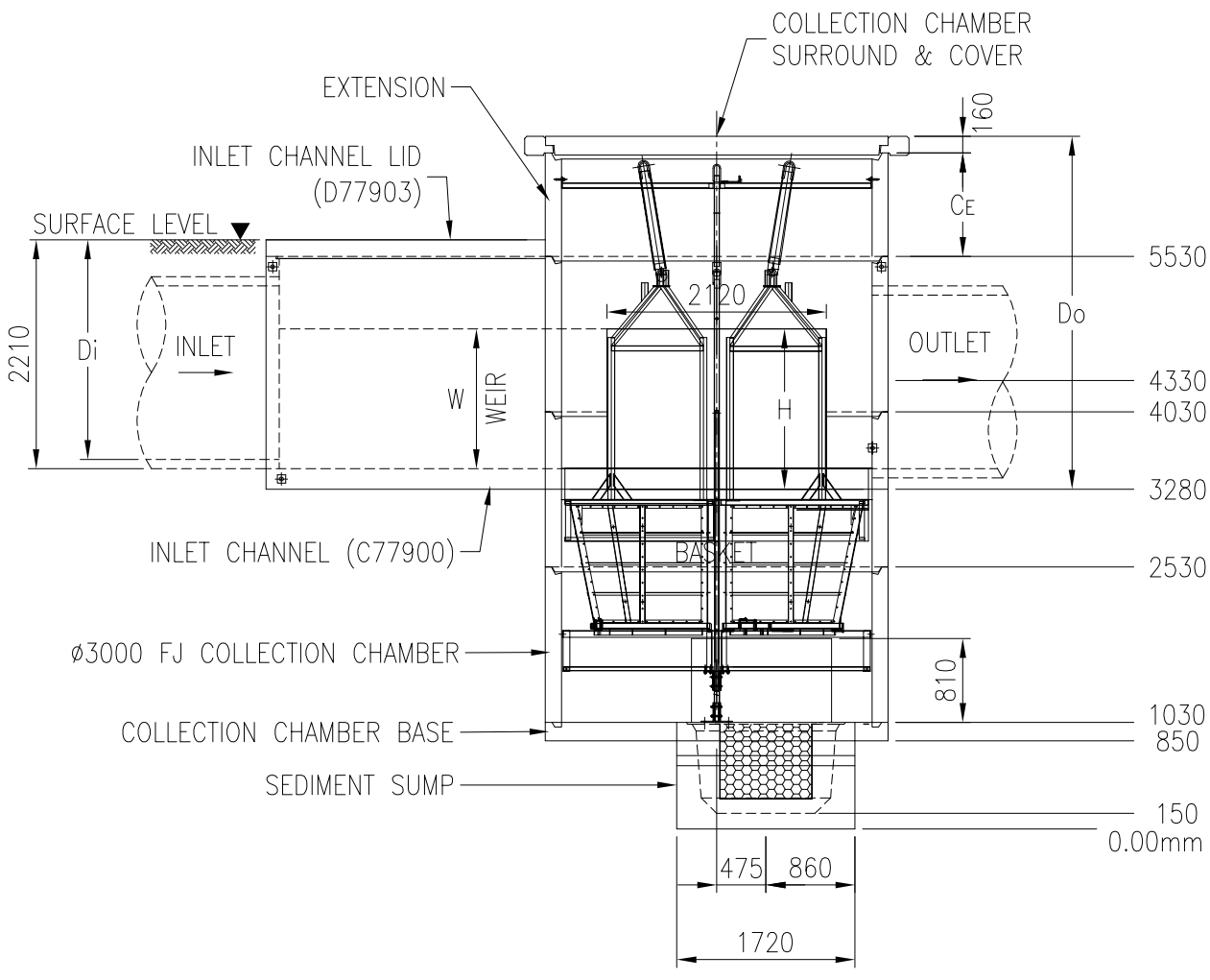

SECTION A–A

STANDARD DRAWING

AUSTRALIAN AND INTERNATIONAL patents registered ROCLA PROPRIETARY LIMITED – A.C.N. 31 000 032 191

CONFIDENTIAL

THE DESIGN DRAWINGS AND ALL INFORMATION AND CONCEPTS SPECIFIED THEREIN ARE CONFIDENTIAL AND MAY BE USED ONLY FOR THE PROJECT DESIGNATED BY ROCLA. IT IS SUBMITTED FOR USE IN CONNECTION WITH PROPOSALS AND CONTRACTS OF ROCLA THAT IS NOT TO BE REPRODUCED OR COPIED IN ANY FORM. DATA TO BE USED ONLY WITH REFERENCE TO PRODUCTS MANUFACTURED AND SUPPLIED BY ROCLA. ROCLA POLICY IS TO PROTECT ITS TECHNOLOGY AND CONFIDENTIAL INFORMATION. ROCLA WILL TAKE APPROPRIATE LEGAL ACTION WHERE UNAUTHORISED OR IMPROPER USE OR DISCLOSURE HAS BEEN MADE OF ITS CONFIDENTIAL INFORMATION. ALL DESIGN DRAWINGS AND OTHER CONFIDENTIAL INFORMATION ARE TO BE DESTROYED OR RETURNED TO ROCLA UPON COMPLETION OF THE DESIGNATED PROJECT, UNLESS REQUIRED FOR ESSENTIAL RECORD KEEPING.

COPYRIGHT

© ROCLA PROPRIETARY LIMITED – A.C.N. 31 000 032 191

THE UNAUTHORISED USE OR REPRODUCTION OF THE DESIGN DRAWINGS IS A BREACH OF THE COPYRIGHT ACT. BREACHES OF THE COPYRIGHT ACT WILL BE PROSECUTED.

SUBJECT

DRG NO.	REFERENCE DRAWINGS

REV	DATE	DESCRIPTION	CH	AP

REFERENCE DRAWINGS

UNLESS OTHERWISE SPECIFIED, ALL DIMENSIONS ARE IN MILLIMETRE.

DO NOT SCALE DRAWING, USE WRITTEN DIMENSIONS ONLY.

FOR TENDER ONLY

NOTES :

THE DIMENSIONS OF ACTUAL PRECAST COMPONENTS MAY BE DIFFERENT FROM THE DRAWINGS, CONTRACTORS MUST CONDUCT MEASUREMENT ON SITE PRIOR EXCAVATION AND SHALL NOTIFY ECOCLEAN TECHNOLOGY SDN. BHD. OF ANY DISCREPANCIES FOUND. ECOCLEAN TECHNOLOGY SDN. BHD. SHALL NOT BE LIABLE OF ANY COST INCURRED AS A RESULT OF SUCH DISCREPANCIES.

OWNER:

CONSULTING ENGINEER:

CONTRACTOR:

MALAYSIAN LICENSEE:

ECOCLEAN TECHNOLOGY SDN. BHD.
12A–18, WISMA ZELAN,
JALAN TASIK PERMAISURI 2,
BANDAR TUN RAZAK, CHERAS,
56000 KUALA LUMPUR
TEL: 603 – 9171 8160
FAX: 603 – 9171 9160
E–MAIL: sales@ecoclean.com.my

PATENT RIGHT HOLDER:

ROCLA PTY. LTD.
ABN 31 000 032 191
72, ORCHARDLIEGH,
ST. GUILDFORD, NSW 2161
Tel : (07)–4042 3400
Fax : (07)–4042 3401

PROJECT:

TITLE	CleansAll CL 1200ES – OFFLINE GENERAL ARRANGEMENT RIGHT HAND INSTALLATION WITH EXTENSION		
Project		CHECKED BY	YALE WONG
Unit In : mm	SCALE : 1 : 35	DATE :	27/08/2018
Job No :			
Dwg No :	ECT/STD/CL1200ES/OFFLINE/01		REV 0